WWW.ASTONLIGHTING.COM

MANCHESTER 10

Spec Sheet **ASTON LED**

MNC 10

Floodlights

v.190325

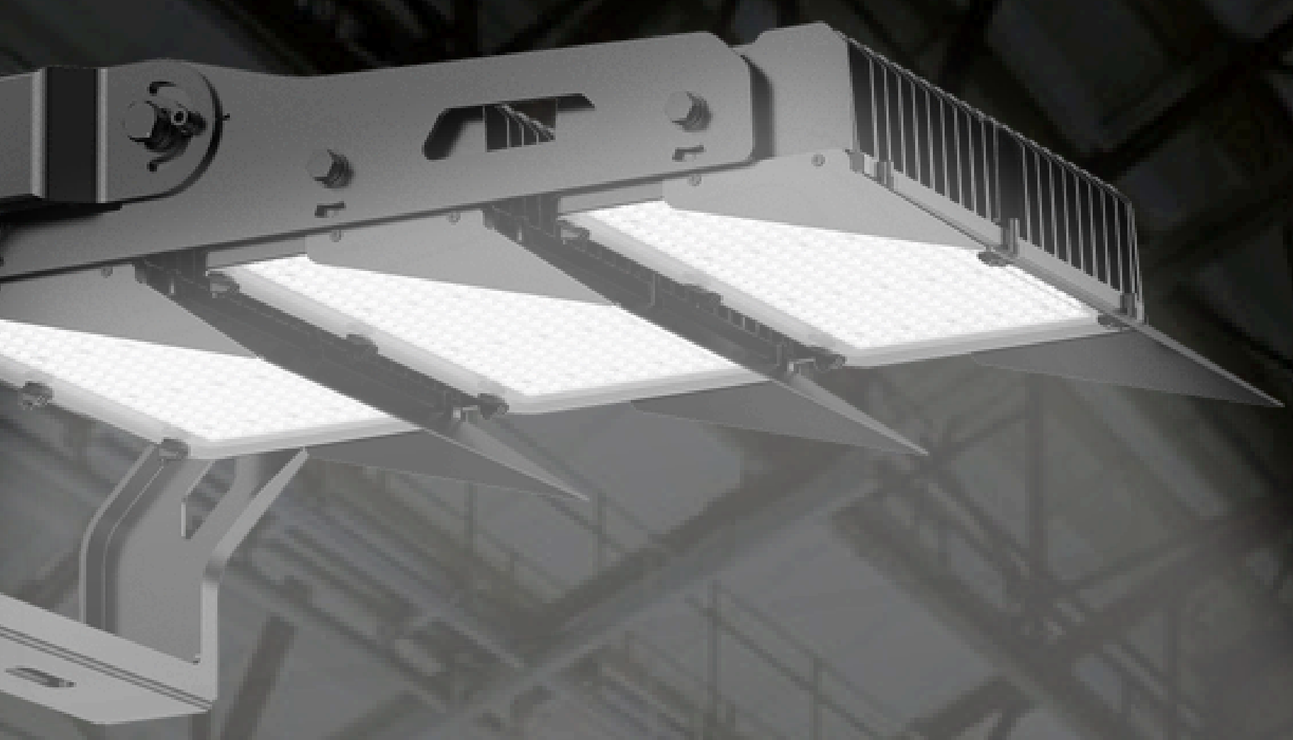

ASTON

High-power professional lighting for stadiums and sports venues

The **MANCHESTER 10** LED floodlight is designed to provide **powerful and uniform illumination** in high-level sports environments. With a luminous efficacy of **up to 155 lm/W** and a luminous flux of up to **279,000 lm**, it ensures optimal visibility in stadiums, courts, and sports centers. Its high **color rendering index (CRI ≥70, optional 80-90)** allows excellent color perception for broadcasts and events. Additionally, it features **DALI/DMX** smart control options for advanced lighting management.

Applications

- Stadiums and sports courts
- Swimming pools and aquatic centers
- Airports and railway stations
- Exhibition and event centers

Certifications

CE CB RoHS SAA

High Efficiency: Up to **155 lm/W**, ensuring superior brightness with reduced energy consumption.

Superior luminous flux: Up to **279,000 lm** to ensure visibility in large spaces.

Optimal color rendering: CRI ≥70 (optional 80-90) for natural and accurate lighting.

Maximum resistance: IP66 and IK08 protection, designed to withstand extreme conditions.

MANCHESTER 10 - MNC 10

Technical **Specifications**

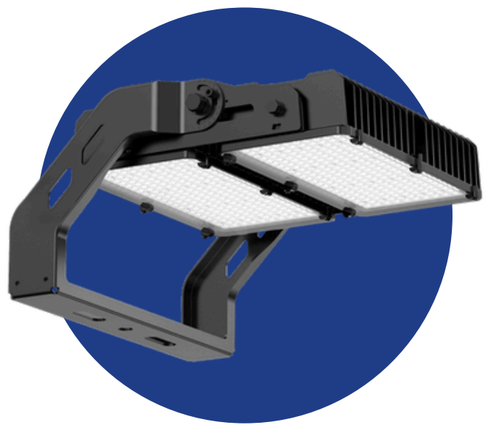

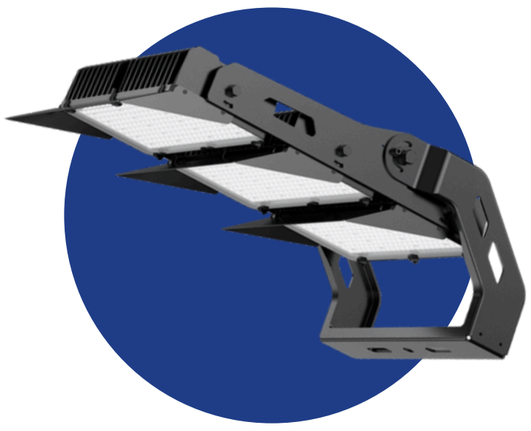

Technical Specifications			
Model No.	**MNC 10-400**	**MNC 10-600**	**MNC 10-800**
Power (W)	400W	600W	800W
Luminous Flux (lm)	54,800 lm (LED 3737) 59,600 lm(LED 5050)	84,000 lm (LED 3737) 93,000 lm (LED 5050)	109,600 lm (LED 3737) 119,200 lm (LED 5050)
Luminous Efficacy (lm/W)	137 lm/W (LED 3737) 149 lm/W (LED 5050)	140 lm/W (LED 3737) 155 lm/W (LED 5050)	137 lm/W (LED 3737) 149 lm/W (LED 5050)
Correlated Color Temperature (CCT)	5700K (Optional: 3000K, 4000K)		
Color Rendering Index (CRI)	≥70 (Optional: 80, 90)		
Input Voltage (V, Hz)	120-240V AC, 50/60 Hz		
Power Factor (PF)	≥0.97		
Dimming	0-10V / DALI / DMX optional		
Control			
IP Rating	IP66		
IK Rating	IK08		
Material	Aluminum alloy (less than 0.01% copper content), polycarbonate optical lens, tempered glass		
Mounting Option	Bracket mounting		
Dimensions (mm)	479 × 224 × 220	479 × 224 × 245	510 × 332 × 368
Weight (kg)	Lamp: 6.3 kg Driver: 3.6 kg	Lamp: 7.8 kg Driver: 4.7 kg	Lamp: 13.7 kg Driver: 5.4 kg
Working Temperature (°C)	-30°C to +40°C (LED 3737) -30°C to +50°C (LED 5050)		
Lifespan (h)	100,000 h (LED 3737) 160,000 h (LED 5050)		
Warranty	5 years		

MANCHESTER 10 - MNC 10

Technical **Specifications**

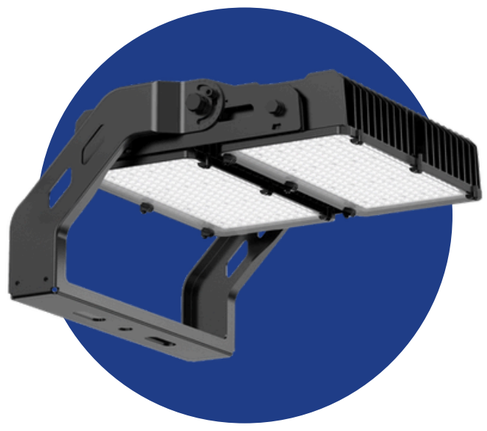

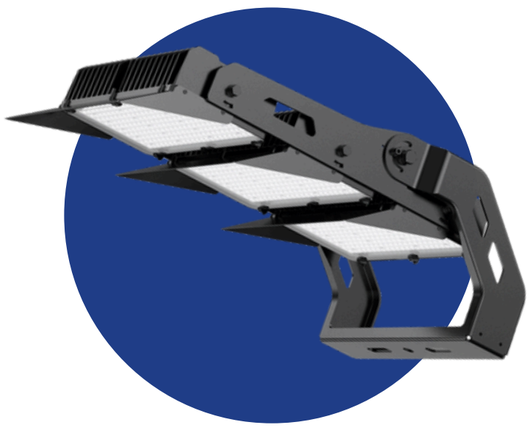

Technical Specifications			
Model No.	**MNC 10-1200**	**MNC 10-1500**	**MNC 10-1800**
Power (W)	1200W	1500W	1800W
Luminous Flux (lm)	168,000 lm (LED 3737) 186,000 lm (LED 5050)	211,500 lm (LED 3737) 229,500 lm (LED 5050)	252,000 lm (LED 3737) 279,000 lm (LED 5050)
Luminous Efficacy (lm/W)	140 lm/W (LED 3737) 155 lm/W (LED 5050)	141 lm/W (LED 3737) 153 lm/W (LED 5050)	140 lm/W (LED 3737) 155 lm/W (LED 5050)
Correlated Color Temperature (CCT)	5700K (Optional: 3000K, 4000K)		
Color Rendering Index (CRI)	≥70 (Optional: 80, 90)		
Input Voltage (V, Hz)	120-240V AC, 50/60 Hz 220-240V AC, 50/60	200-420V AC, 50/60 Hz	
Power Factor (PF)	≥0.97		
Dimming	0-10V / DALI / DMX optional		
Control			
IP Rating	IP66		
IK Rating	IK08		
Material	Aluminum alloy (less than 0.01% copper content), polycarbonate optical lens, tempered glass		
Mounting Option	Bracket mounting		
Dimensions (mm)	510 × 394 × 496	515 × 444 × 691	515 × 444 × 757
Weight (kg)	Lamp: 18.8 kg Driver: 6.6 kg	Lamp: 24.8 kg Driver: 6.0 kg	Lamp: 28.0 kg Driver: 6.0 kg
Working Temperature (°C)	-30°C to +40°C (LED 3737) -30°C to +50°C (LED 5050)		
Lifespan (h)	100,000 h (LED 3737) 160,000 h (LED 5050)		
Warranty	5 years		

ASTON

WWW.ASTONLIGHTING.COM